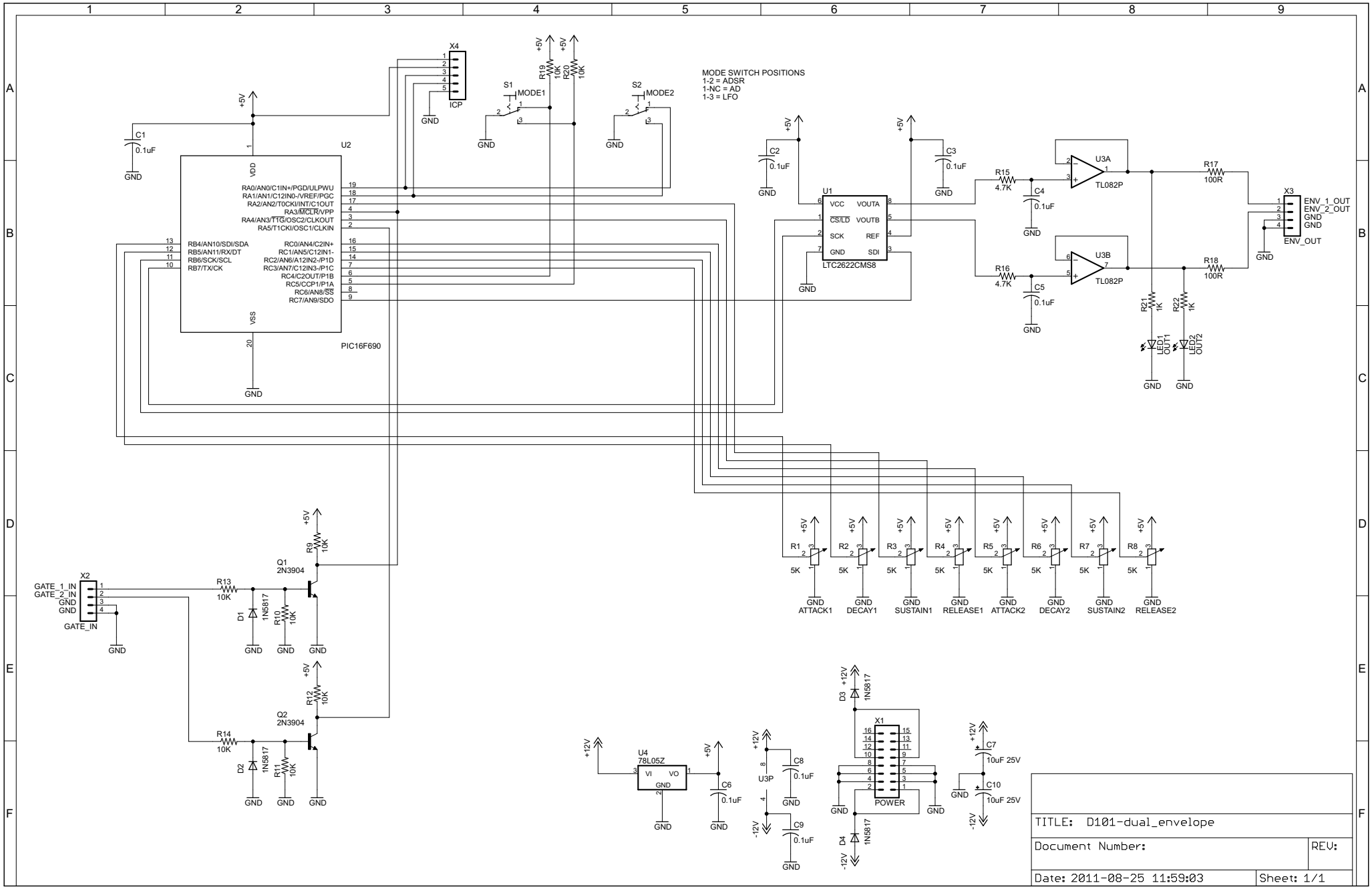

2011-08-25 11:59:19 f=0.63 O:\eagle\D101-dual_envelope\D101-dual_envelope.sch (Sheet: 1/1)