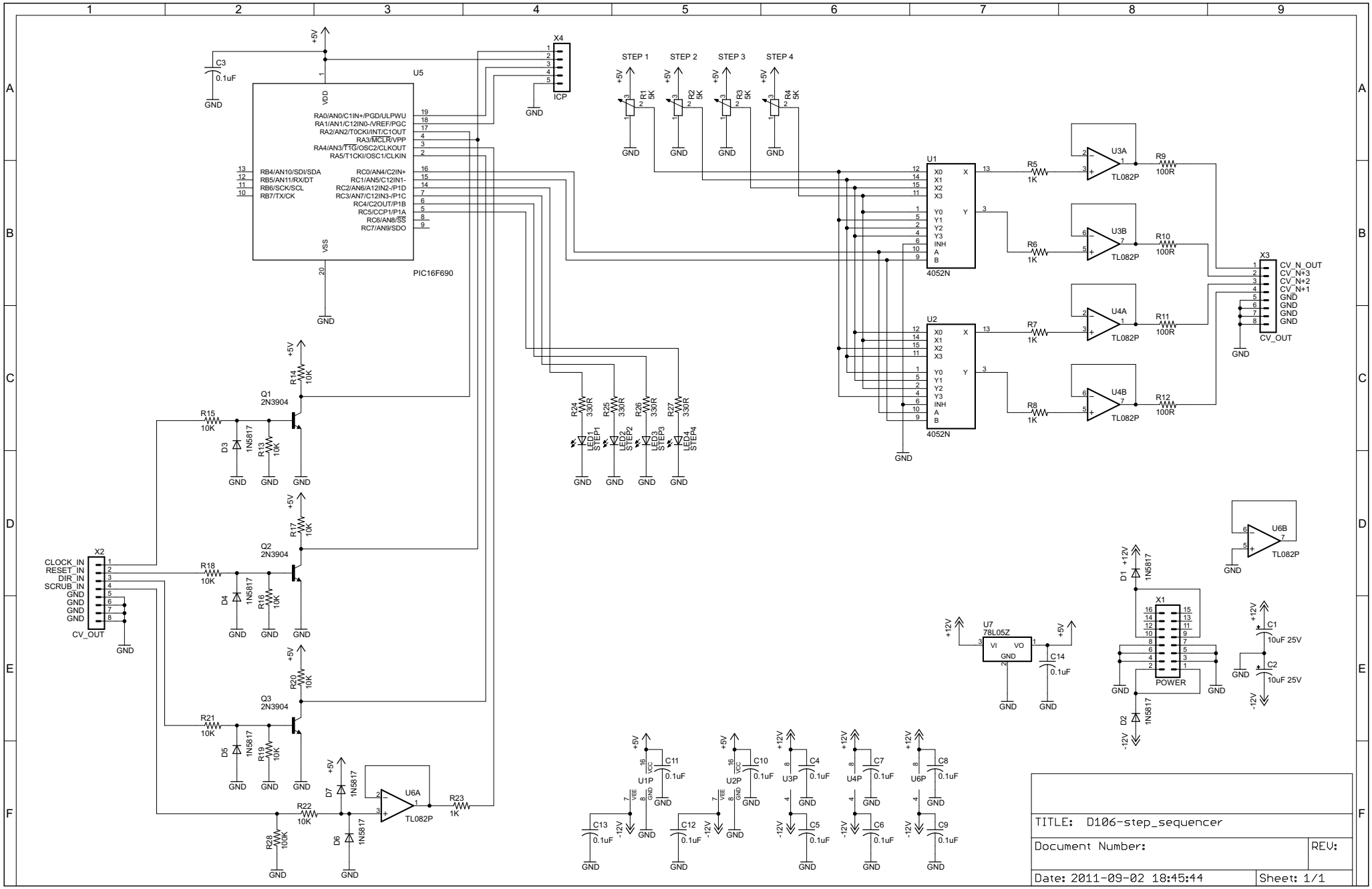

2011-09-02 18:45:55 f=0.63 O:\eagle\D106-step_sequencer\D106-step_sequencer.sch (Sheet: 1/1)